GENERATING SETS

WATER COOLED | THREE PHASES | 50 HZ | DIESEL

Service		Standby	Prime
Power	*kVA*	50	45
Power	*kW*	40	36
Rated Speed	*r.p.m*	1500	
Standart Voltage	*V*	400/230	
Rated At Power Factor	*Cos Phi*	0,8	

- 2006/42/CE Machinery safety.
- 2014/30/UE Electromagnetic compatibility.
- 2014/35/UE electrical equipment designed for use within certain voltage limits
- 2000/14/EC Sound Power level. Noise emissions outdoor equipment. (amended by 2005/88/EC)
- 97/68/EC Emissions of gaseous and particulate pollutants. (amended by 2002/88/EC & 2004/26/EC)
- EN 12100, EN 13857, EN 60204

Ambient conditions of reference according to ISO 8528-1:2005 normative: 1000 mbar, 25ºC, 30% relative humidity.
G2 class load acceptance in accordance with ISO 8528-5:2013

TUNAYLAR KESİNTİSİZ ENERJİ SİSTEMLERİ ELEK. ELEKTRONİK ve BİLİŞİM TEKNOLOJİLERİ LTD. ŞTİ.
Fabrika: Adnan Kahveci Mah. Davutpaşa Cad. No:15 / Beylikdüzü - ISTANBUL
www.tunaylarenerji.com - info@tunaylarenerji.com
https://www.facebook.com/tunaylarenerji https://www.instagram.com/tunaylarenerji/
Merkez: +90 (212) 291 33 00 (PBX) - Mobil GSM: +90 (539) 379 04 34

Engine		Specifications
Rated Output	kW	36
Manufacturer		Perkins
Model		1103A-33TG1
Engine Type		4 Stroke - Diesel
Injection Type		Direct Injection
Aspiration Type		Turbo Charged
Number of cylinder		3 L
Bore and Stroke	mm	105x127
Displacement	L	3,3
Cooling System		Water Cooling
Hecting Power	Watt	1000W
Fuel Consumption 50% PRP	l/h	5,7
Fuel Consumption 75% PRP	l/h	8,2
Fuel Consumption 100 % PRP	l/h	10,7
Fuel Consumption Standby	l/h	12
Lube oil consumption with full load	(% fuel)	218
Total oil capacity including tubes, filters	L	7,9
Total coolant capacity	L	10,2
Governor	Type	Mechanical/Electronic
Battery Capacity	A	75

Alternator		Specifications
Manufacturer		Maranello
Model		M50
Output Voltage	V	230/400
Frequency	HZ	50
Automatic Voltage Regulation	±%	1
Alternator Stand By Power	kVA	50
Alternator Continuous Power	kVA	45
Power Factor	Cosq	0,8
Number of Wires		12
Winding		2/3
Protection Class		IP23 / H
Excition System		Self-excited
AVR Model		SX460
Performance - PF 0,8 / %75 Load	%	89

Prime Power (PRP):

According to ISO 8528-1:2005, Prime power is the maximum power which a generating set is capable of delivering continuously whilst supplying a variable electrical load when operated for an unlimited number of hours per year under the agreed operating conditions with the maintenance intervals and procedures being carried out as prescribed by the manufacturer. The permissible average power output (Ppp) over 24 h of operation shall not exceed 70 % of the PRP.

Emergency Standby Power (ESP):

According to ISO 8528-1:2005, Emergency standby power is the maximum power available during a variable electrical power sequence, under the stated operating conditions, for which a generating set is capable of delivering in the event of a utility power outage or under test conditions for up to 200 h of operation per year with the maintenance intervals and procedures being carried out as prescribed by the manufacturers. The permissible average power output over 24 h of operation shall not exceed 70 % of the ESP.

Note: All data based on operation to ISO 3046/1, BS 5514 and DIN 6271 standard reference conditions

TUNAYLAR KESİNTİSİZ ENERJİ SİSTEMLERİ ELEK. ELEKTRONİK ve BİLİŞİM TEKNOLOJİLERİ LTD. ŞTİ.
Fabrika: Adnan Kahveci Mah. Davutpaşa Cad. No:15 / Beylikdüzü - ISTANBUL
www.tunaylarenerji.com - info@tunaylarenerji.com
https://www.facebook.com/tunaylarenerji https://www.instagram.com/tunaylarenerji/
Merkez: +90 (212) 291 33 00 (PBX) - Mobil GSM: +90 (539) 379 04 34

DIMENSIONS

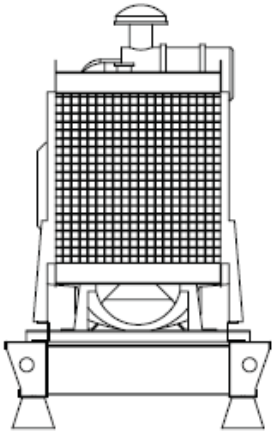

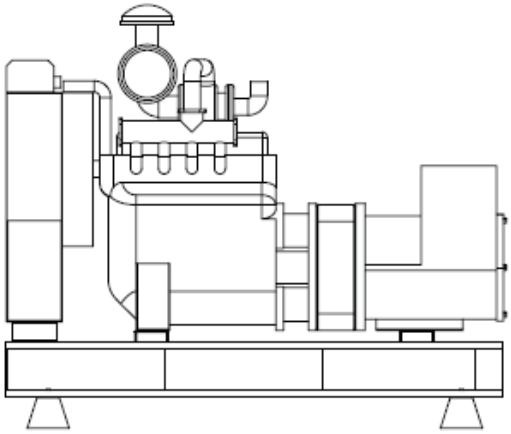

OPEN SET

LxWxH	*mm*	1800x950x1450
Weight	*kg*	850
Fuel Tank	*lt*	140

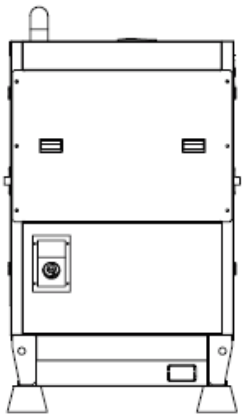

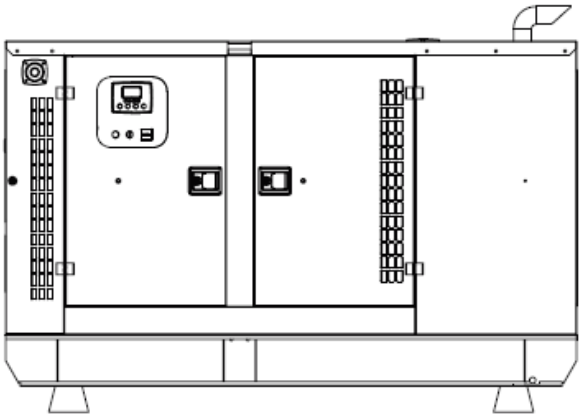

CANOPIED

LxWxH	*mm*	2225x950x1640
Weight	*kg*	1190
Fuel Tank	*lt*	140

Sound Proof Canopy

- Special design for minimizing acoustic level.
- Galvanized steel construction further protected by polyester powder coat paint.
- Black finish stainless steel locks and hinges.
- Control panel viewing window in a lockable access door.
- Emergency stop push button (red) mounted on enclosure exterior.

TUNAYLAR KESİNTİSİZ ENERJİ SİSTEMLERİ ELEK. ELEKTRONİK ve BİLİŞİM TEKNOLOJİLERİ LTD. ŞTİ.
Fabrika: Adnan Kahveci Mah. Davutpaşa Cad. No:15 / Beylikdüzü - ISTANBUL
www.tunaylarenerji.com - info@tunaylarenerji.com
https://www.facebook.com/tunaylarenerji https://www.instagram.com/tunaylarenerji/
Merkez: +90 (212) 291 33 00 (PBX) - Mobil GSM: +90 (539) 379 04 34